ADSS Beam line in 30MeV Proton Medical Cyclotron at Kolkata to carry out ADS target experiments

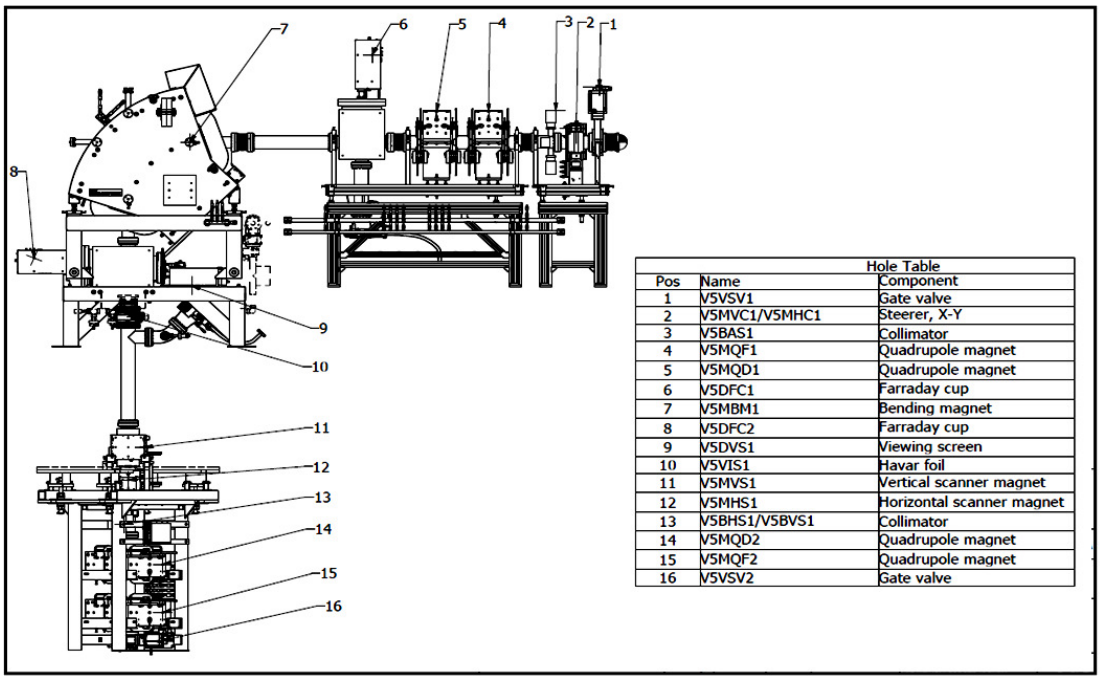

Hole Table		
Pos	Name	Component
1	V5VSV1	Gate valve
2	V5MVC1/V5MHC1	Steerer, X-Y
3	V5BAS1	Collimator
4	V5MQF1	Quadrupole magnet
5	V5MQD1	Quadrupole magnet
6	V5DFC1	Farraday cup
7	V5MBM1	Bending magnet
8	V5DFC2	Farraday cup
9	V5DVS1	Viewing screen
10	V5VIS1	Havar foil
11	V5MVS1	Vertical scanner magnet
12	V5MHS1	Horizontal scanner magnet
13	V5BHS1/V5BVS1	Collimator
14	V5MQD2	Quadrupole magnet
15	V5MQF2	Quadrupole magnet
16	V5VSV2	Gate valve